Technische Daten/ Technical Data

KLUDI 1926
basin mixer
DN 15

Ref.: 510124520

Finishes:
45 gold plated 23 carat

Product description
Manufacturer KLUDI GmbH & Co. KG
Typ: KLUDI 1926
basin mixer
Ref.: 510124520

basin mixer
2-handle mixer
1-hole mounted
cross handle, metal
aerator M24 PCA
ceramic headparts 180°
copper pipes Ø 10mm
rapid installation set
flow rate at 3 bar 5 l/min.
pop up waste G1 1/4 metal
EU taxonomy: max. 6 l/min. -
Substantial Contribution (SC) possible

Produktabbildung/ Product picture

Maßzeichnung/ Dimensional drawing

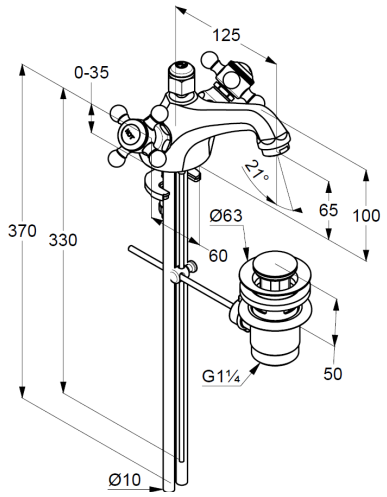
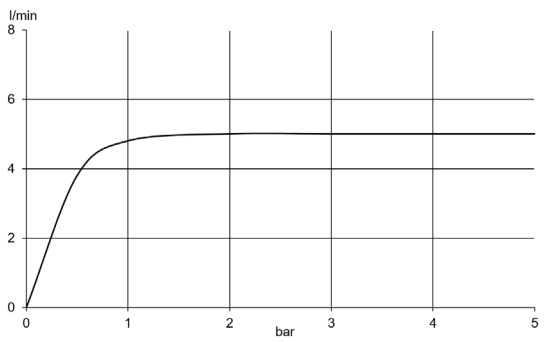
Durchfluss/ Flow rate