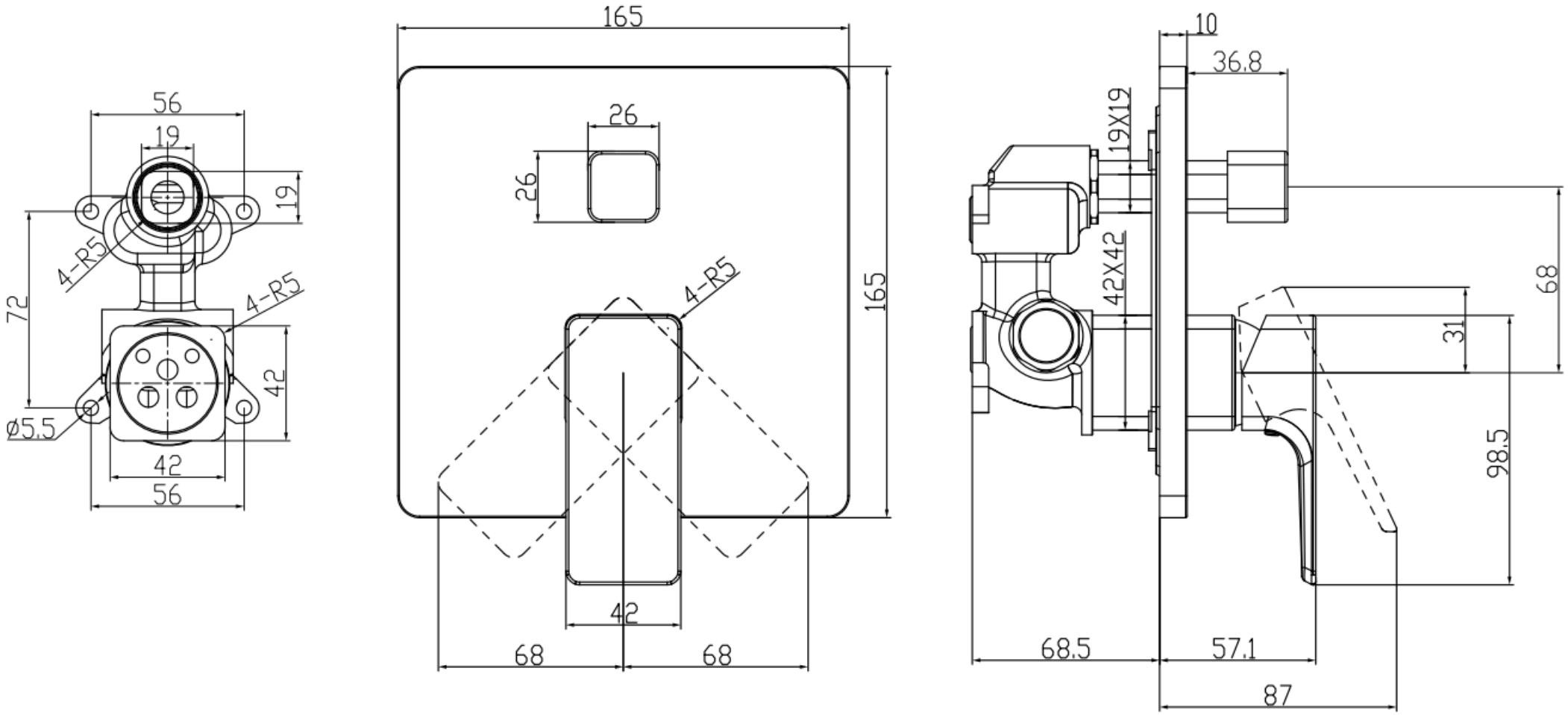

Conum TVS11200300061	Villeroy & Boch 1748
V01 / 25.01.2022	