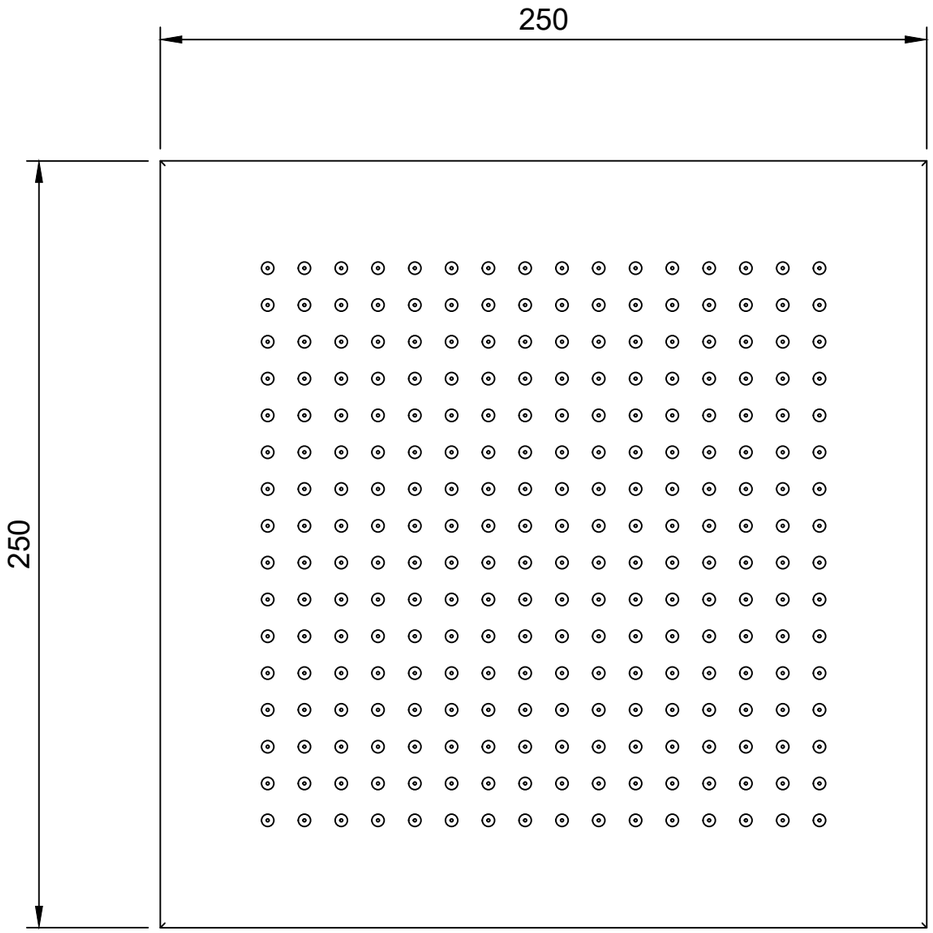

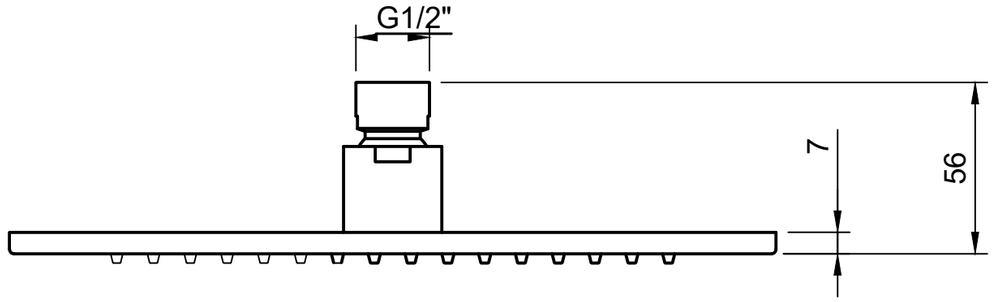

Universal Showers TVS000002000	Villeroy & Boch 1748
V01 / 30.06.2021	